YAMAHA

PARTS CATALOGUE

MA19075010 (7JDB) FRA

YAMAHA
GENUINE
Parts & Accessories

1T7JD-300EV

( )

MA19075010
PARTS CATALOGUE
©2018 by Yamaha Motor Co., Ltd.
1st edition, September 2018
All rights reserved.
Any reprinting or unauthorized use
without the written permission of
Yamaha Motor Co., Ltd.
is expressly prohibited.
Printed in Japan.

FOREWORD

This Parts Catalogue is related to the parts for the model(s) on the cover page. When you are ordering replacement parts, please refer to this Parts Catalogue and quote both part numbers and part names correctly.

1. Modifications or additions which have been made after the issue of the Parts Catalogue will be announced in the Parts News.
   It is advisable that you make the necessary corrections to the Parts Catalogue according to the Parts News.

2. Abbreviations
   The following abbreviations are used in this Parts Catalogue.

   "UR" Use specified parts number.

   "UN" Use as many as needed.

   "AP" Alternate Parts

   "LM" Locally Made (Parts need to be ordered locally)

   "F#" Frame No. (Applicable machine No.)

   "O/S" Over Size

3. The number of components for assembly
   - Parts, which are to be supplied in an assembly, are listed with a dot (.) in front of the part name as shown below.
   - The numeral appearing to the right of each component part indicates the quantity of parts for each assembly unit.

PART NO.	DESCRIPTION	Q'TY	REMARKS
2F5–83310–60	FRONT FLASHER LIGHT ASSY	2	
115–83311–60	.BULB (6V–18W)	1	

4. Applicable colours of graphics are represented in the "REMARKS" as shown below.

PART NO.	DESCRIPTION	Q'TY	REMARKS
2N4–24110–00–X5	FUEL TANK COMP.	2	MXR
3J1–24240–10	.GRAPHIC, FUEL TANK	1	FOR MXR

5. Note that the illustrations for reference in finding parts numbers are not to be used for assembling. When assembling, please use the applicable service manual.

6. The asterisk (*) before a reference number indicates modified items after the first edition.

7. Applicable Serial No.

   Frame Serial No.

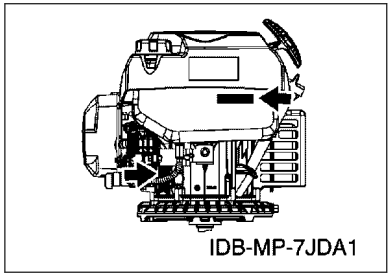

8. Applicable Colour Code (The (*) mark shows Model colour.)

Abbreviation	Colour Name	Colour Code

FOREWORD

Engine Serial No.
This parts catalogue is related to the parts for the models in the list below.

MODEL CODE	MODEL NAME	SPECIFICATION (OUT LINE)	ENGINE SERIAL NO.
7JDB	MA19075010	VERTICAL SHAFT FOR LAWNMOWER	7JDB-6000101

CONTENTS

CYLINDER.....1
CRANKSHAFT & PISTON.....2
GOVERNOR.....3
CAMSHAFT & VALVE.....4
AIR SHROUD & STARTER.....5
INTAKE.....6
EXHAUST.....7
CRANKCASE.....8
FUEL TANK.....9
ELECTRICAL.....10
EMBLEM & LABEL.....11

INDEX

NUMERICAL INDEX.....12

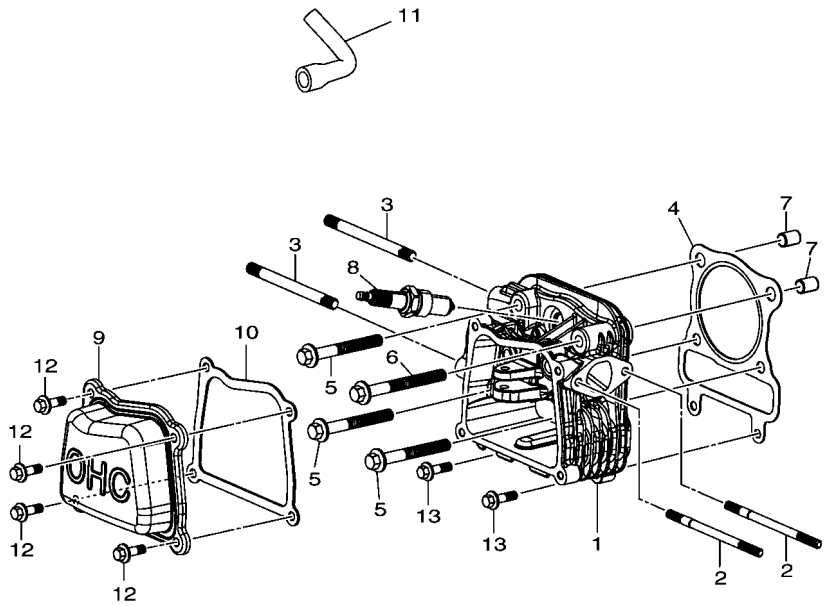

7JDA30K-S010

FIG. 1 CYLINDER

REF. NO.	PART NO.	DESCRIPTION	7JDB					REMARKS
1	7JD–E1111–00	HEAD, CYLINDER 1	1					
2	7JD–E1391–00	BOLT, STUD 1	2					
3	7JD–E1392–00	BOLT, STUD 2	2					
4	7JD–E1181–00	GASKET, CYLINDER HEAD 1	1					
5	7JD–E1361–00	BOLT, CYLINDER HOLDING 1	3					
6	7JD–E1362–00	BOLT, CYLINDER HOLDING 2	1					
7	7JD–E5181–20	PIN, DOWEL	2					
8	7JD–E119C–10	PLUG, SPARK	1					
9	7JD–E1191–00	COVER, CYLINDER HEAD 1	1					
10	7JD–E1193–00	GASKET, HEAD COVER 1	1					
11	7JD–E531A–00	HOSE, BREATHER 1	1					
12	7JD–RA102–00	BOLT, FLANGE	4					
13	7JD–RA102–10	BOLT, FLANGE	2					

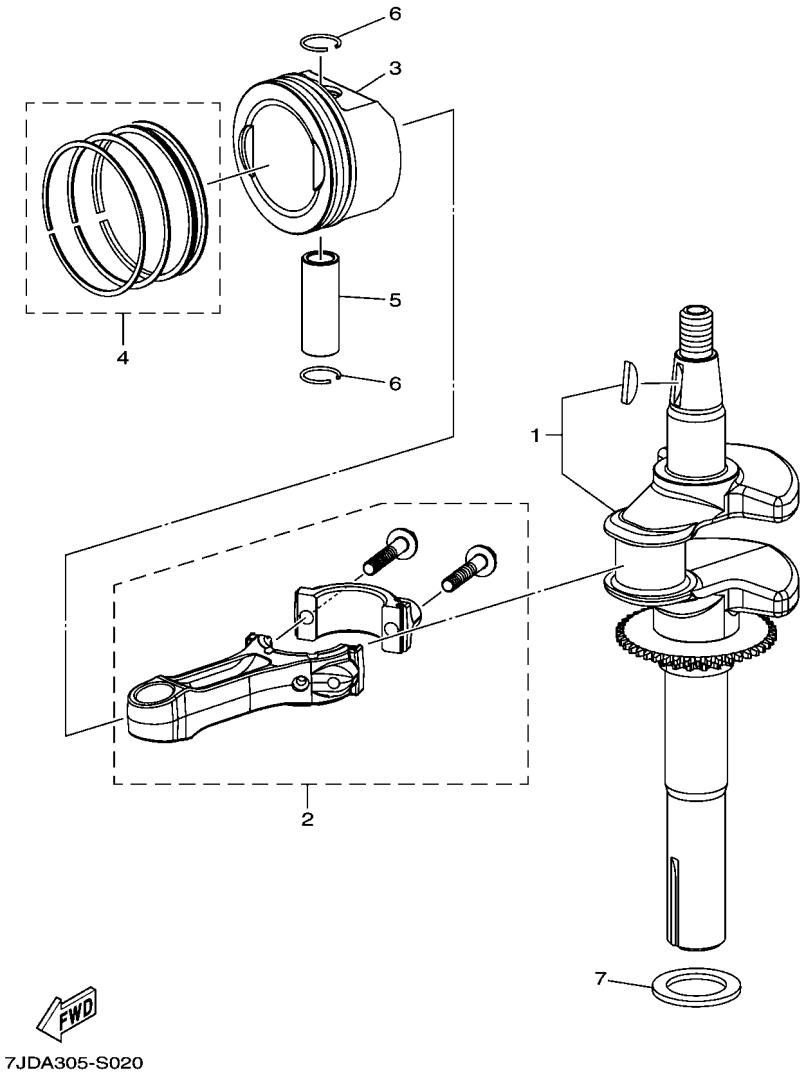

FIG. 2 CRANKSHAFT & PISTON

REF. NO.	PART NO.	DESCRIPTION	7JDB					REMARKS
1	7JD–E1411–00	CRANKSHAFT	1					
2	7JD–E1650–00	CONNECTING ROD ASSY	1					
3	7JD–E1631–00	PISTON (STD)	1					
4	7JD–E1610–00	PISTON RING SET (STD)	1					
5	7JD–E1633–00	PIN, PISTON	1					
6	7JD–E1634–00	CLIP, PISTON PIN	2					
7	7JD–RA400–00	WASHER, PLAIN	1					

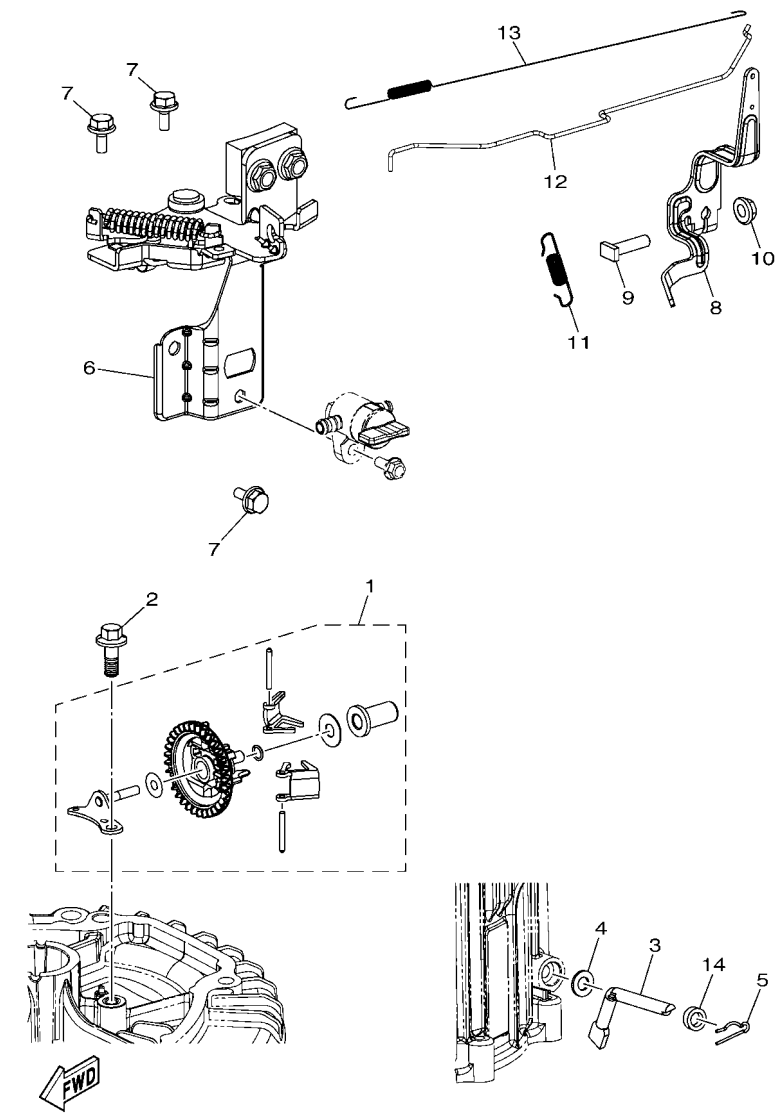

7JDB30V-T030

FIG. 3 GOVERNOR

REF. NO.	PART NO.	DESCRIPTION	7JDB					REMARKS
1	7JD–E1970–00	FLYWEIGHT SHAFT ASSY	1					
2	7JD–RA102–20	BOLT, FLANGE	1					
3	7JD–E1922–00	FORK, GOVERNOR	1					
4	7JD–RA400–10	WASHER, PLAIN	1					
5	7JD–E4139–00	CLIP, PIPE	1					
6	7JD–R2630–10	SPEED CONTROL ASSY	1					
7	7JD–RA102–00	BOLT, FLANGE	3					
8	7JD–E1924–00	ARM, GOVERNOR	1					
9	7JD–R4041–00	SCREW,BIND	1					
10	7JD–RA309–00	NUT	1					
11	7JD–E8226–40	SPRING, GOVERNOR	1					
12	7JD–E1928–00	ROD, LINK	1					
13	7JD–RAD01–00	SPRING, TENSION 1	1					
14	7JD–RAE01–20	SEAL, OIL	1					

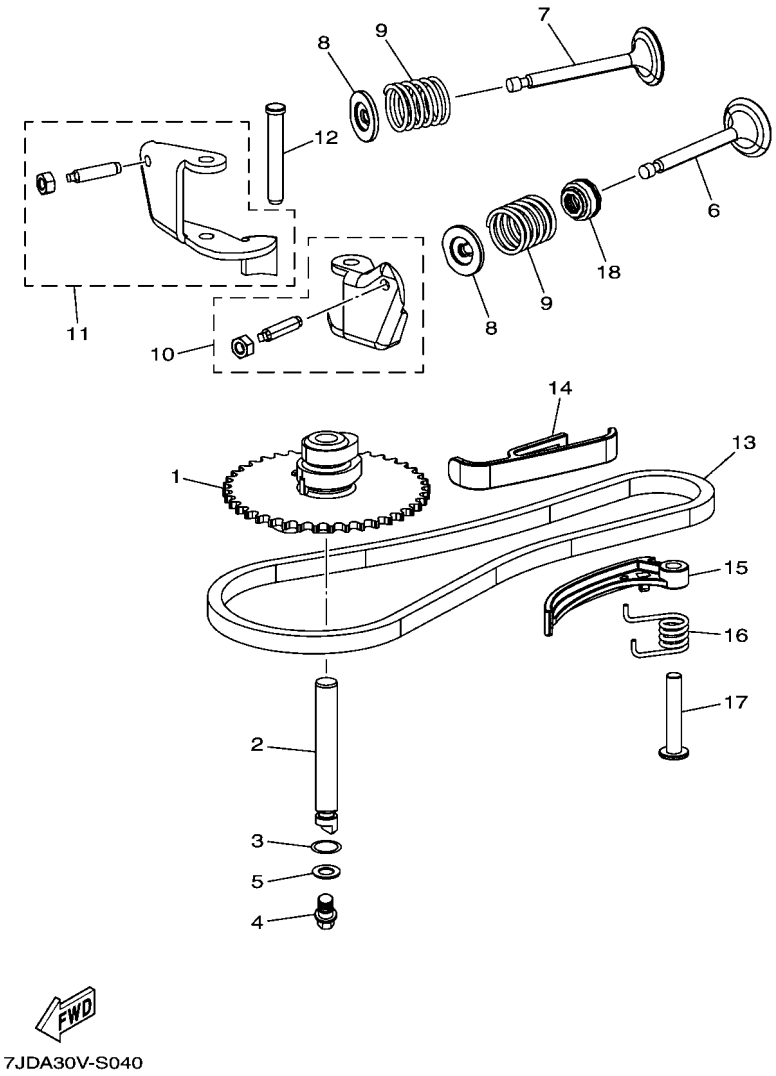

FIG. 4 CAMSHAFT & VALVE

REF. NO.	PART NO.	DESCRIPTION	7JDB					REMARKS
1	7JD–E2170–00	CAMSHAFT ASSY 1	1					
2	7JD–R2483–00	CAM, SHAFT	1					
3	7JD–R1327–00	GASKET,1	1					
4	7JD–RA102–30	BOLT, FLANGE	1					
5	7JD–RA400–30	WASHER, PLAIN	1					
6	7JD–E2111–00	VALVE, INTAKE	1					
7	7JD–E2121–00	VALVE, EXHAUST	1					
8	7JD–E2117–00	RETAINER, VALVE SPRING	2					
9	7JD–E1815–00	SPRING, VALVE	2					
10	7JD–E2150–00	VALVE ROCKER ARM ASSY	1					
11	7JD–E2160–00	VALVE ROCKER ARM ASSY 2	1					
12	7JD–E2146–00	SHAFT, ROCKER	1					
13	7JD–E1456–00	CHAIN, PRIMARY	1					
14	7JD–E2231–00	GUIDE, STOPPER 1	1					
15	7JD–R2441–00	ARM, TENSIONER	1					
16	7JD–E6146–00	SPRG.,TENSIONER	1					
17	7JD–E1499–00	SHAFT, TENSIONER	1					
18	7JD–E2119–00	SEAL, VALVE STEM	1					

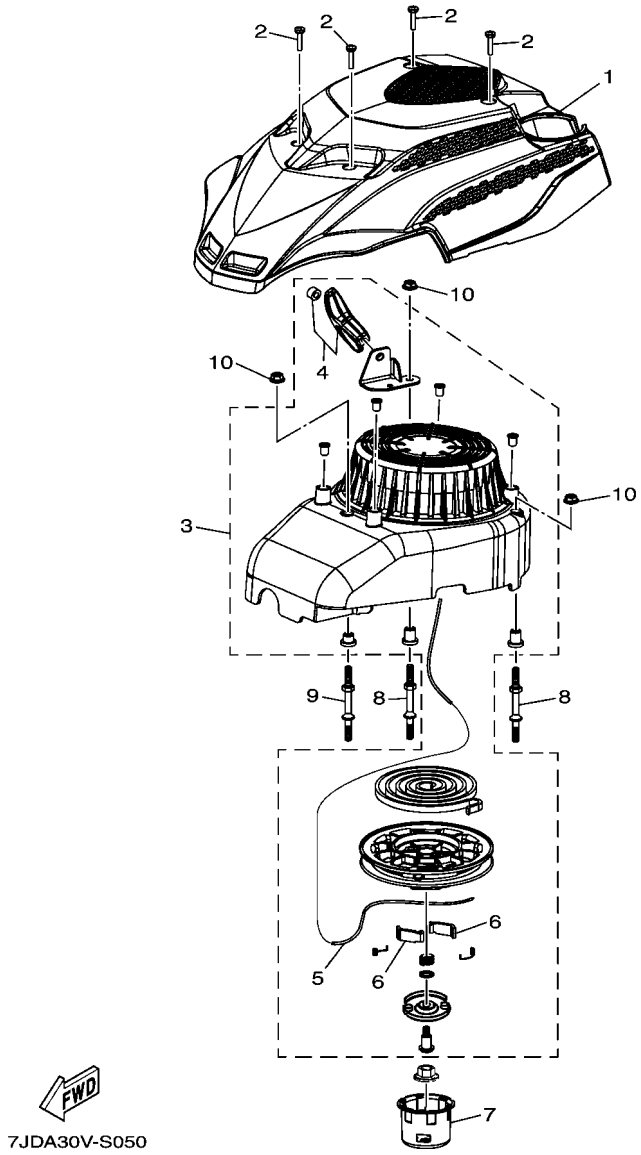

FIG. 5 AIR SHROUD & STARTER

REF. NO.	PART NO.	DESCRIPTION	7JDB					REMARKS
1	7JD–E262E–50	SHROUD, 2	1					
2	7JD–RA204–10	SCREW	4					
3	7JD–E5710–00	STARTER ASSY	1					
4	7JD–E5755–00	.HANDLE, STARTER	1					
5	7JD–E5781–00	.ROPE	1					
6	7JD–E5741–00	.PAWL, DRIVE	2					
7	7JD–E5723–00	PULLEY, STARTER	1					
8	7JD–RA124–00	BOLT, STUD	2					
9	7JD–RA124–10	BOLT, STUD	1					
10	7JD–RA309–00	NUT	3					

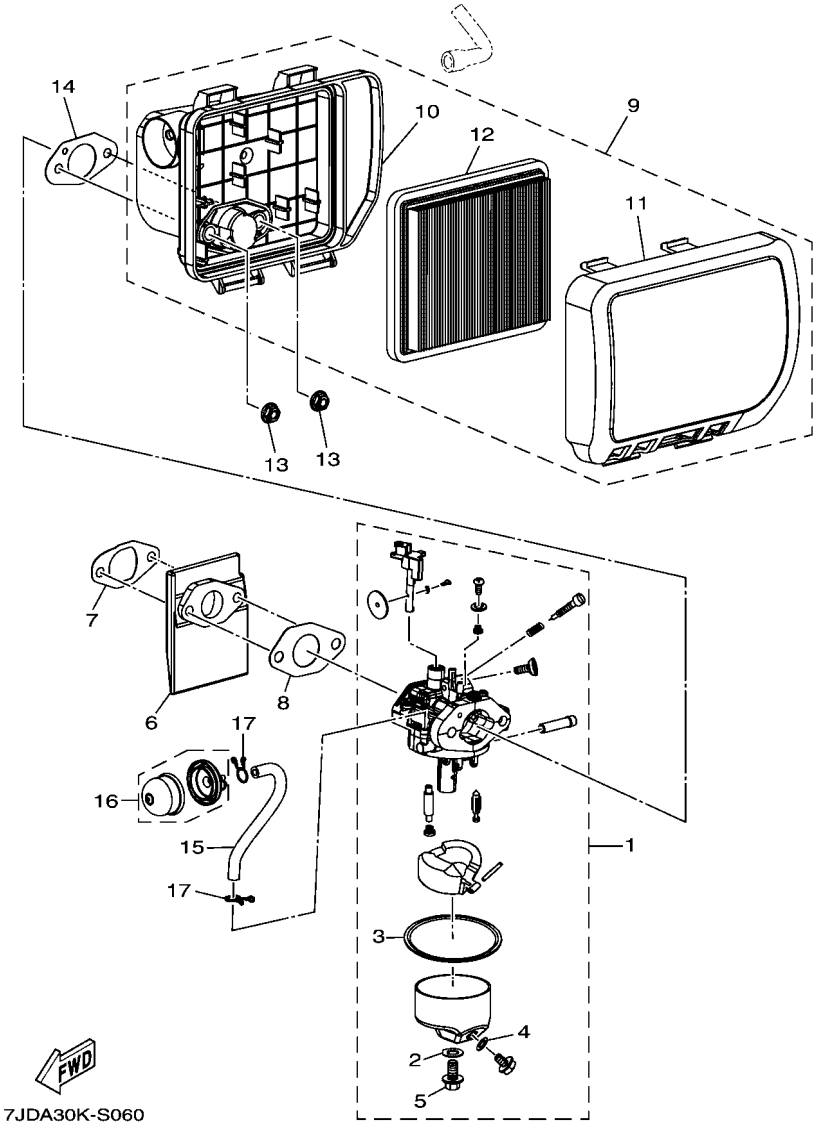

FIG. 6 INTAKE

REF. NO.	PART NO.	DESCRIPTION	7JDB					REMARKS
1	7JD–E4301–30	CARBURETOR ASSY 1	1					
2	7JD–R1167–00	.GASKET, DRAIN	1					
3	7JD–E4184–00	.GASKET, FLOAT CHAMBER	1					
4	7JD–R1327–00	.GASKET,1	1					
5	7JD–E3917–00	.BOLT, DRAIN	1					
6	7JD–E3596–10	JOINT, CARBURETOR 2	1					
7	7JD–E3557–00	GASKET	1					
8	7JD–E3567–00	GASKET	1					
9	7JD–E4410–30	AIR CLEANER ASSY.	1					
10	7JD–E4411–10	.CASE, AIR CLEANER 1	1					
11	7JD–E4412–30	.CAP, CLEANER CASE 1	1					
12	7JD–E4451–00	.ELEMENT, AIR CLEANER	1					
13	7JD–RA309–00	NUT	2					
14	7JD–E4416–00	GASKET, AIR CLEANER	1					
15	7EB–R1385–00	PIPE	1					
16	7EB–R1110–00	PUMP ASSY	1					
17	7EB–RAB00–00	CLAMP, 1	2					

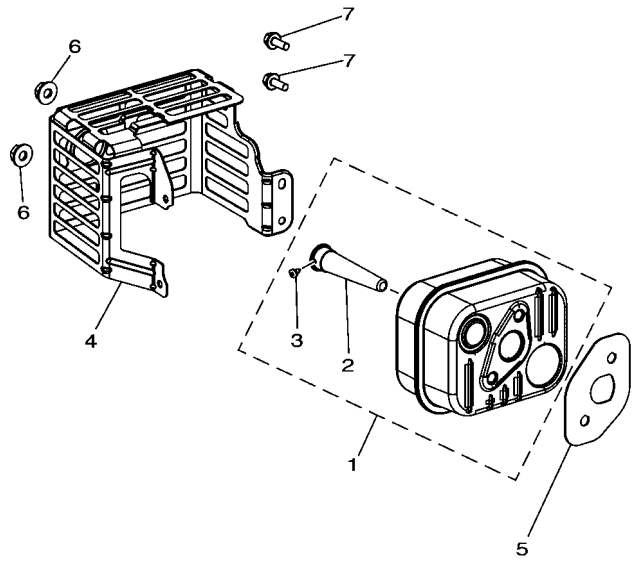

7JDA30K-S070

FIG. 7 EXHAUST

REF. NO.	PART NO.	DESCRIPTION	7JDB					REMARKS
1	7JD–E4710–00	MUFFLER ASSY 1	1					
2	7JD–E4786–00	.ARRESTER, SPARK	1					
3	7JD–RA204–30	.SCREW	1					
4	7JD–E4708–10	PROTECTOR ASSY	1					
5	7JD–E4613–00	GASKET, EXHAUST PIPE	2					
6	7JD–RA309–10	NUT	2					
7	7JD–RA102–00	BOLT, FLANGE	2					

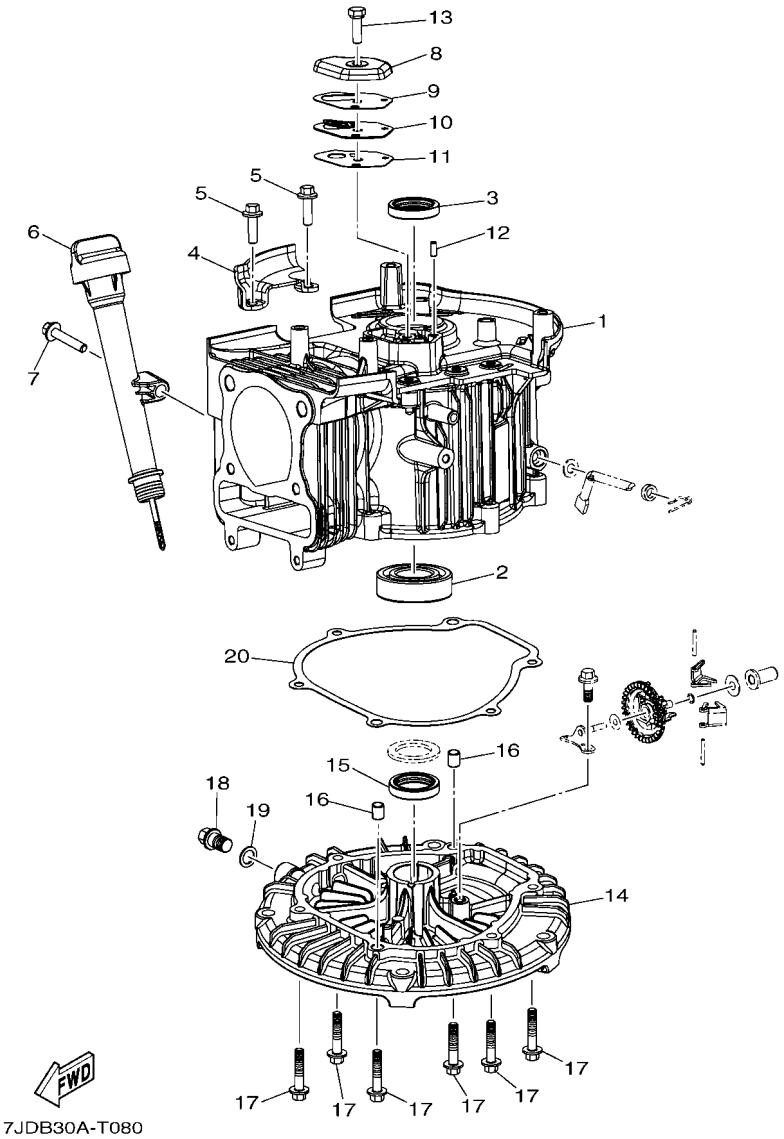

FIG. 8 CRANKCASE

REF. NO.	PART NO.	DESCRIPTION	7JDB					REMARKS
1	7JD–E5111–00	CRANKCASE 1	1					
2	7JD–RAG02–00	BEARING	1					
3	7JD–RAE01–10	SEAL, OIL	1					
4	7JD–E4604–00	COVER, AIR 1	1					
5	7JD–RA102–40	BOLT, FLANGE	2					
6	7JD–E5362–30	PLUG, OIL LEVEL	1					
7	7JD–RA102–60	BOLT, FLANGE	1					
8	7JD–E1168–00	COVER, BREATHER	1					
9	7JD–E5374–00	GASKET, BREATHER	1					
10	7JD–E5346–00	BREATHER 1	1					
11	7JD–E5374–10	GASKET, BREATHER	1					
12	7JD–E5181–00	PIN, DOWEL	1					
13	7JD–RA102–50	BOLT, FLANGE	1					
14	7JD–E5411–00	COVER, CRANKCASE 1	1					
15	7JD–RAE01–00	SEAL, OIL	1					
16	7JD–E5181–10	PIN, DOWEL	2					
17	7JD–RA102–60	BOLT, FLANGE	6					
18	7JD–E5363–00	PLUG, OIL	1					
19	7JD–RA400–20	WASHER, PLAIN	1					
20	7JD–E5451–00	GASKET, CRANKCASE COVER 1	1					

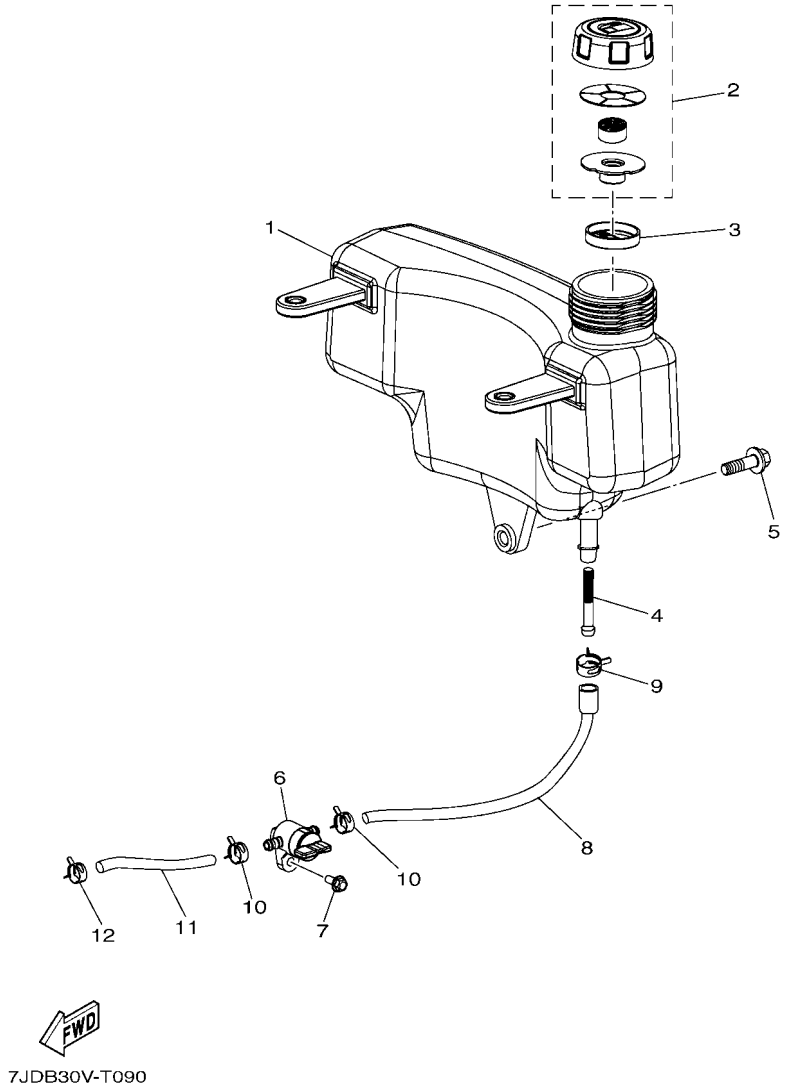

FIG. 9 FUEL TANK

REF. NO.	PART NO.	DESCRIPTION	7JDB					REMARKS
1	7JD–F4110–20	FUEL TANK COMP.	1					
2	7JD–F4610–00	CAP ASSY	1					
3	7JD–F4167–20	STRAINER	1					
4	7JD–F4514–00	NET, FILTER 1	1					
5	7JD–RA102–10	BOLT, FLANGE	1					
6	7JD–F4500–10	FUEL COCK ASSY 1	1					
7	7JD–RA102–80	BOLT, FLANGE	1					
8	7JD–RA905–10	HOSE, 1	1					
9	7JD–RAB00–00	CLAMP, 1	1					
10	7JD–RAB00–10	CLAMP, 1	2					
11	7JD–RA905–00	HOSE, 1	1					
12	7JD–RAB00–20	CLAMP, 1	1					

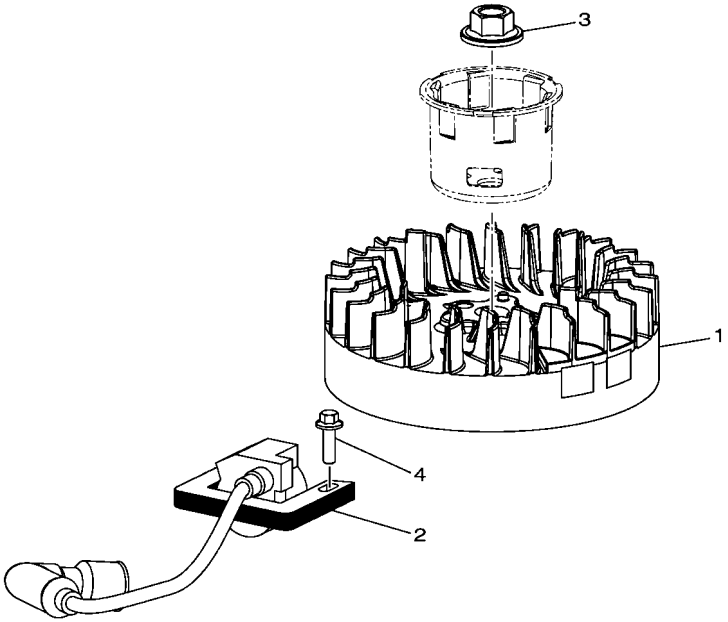

7JDA30V-S100

FIG. 10 ELECTRICAL

REF. NO.	PART NO.	DESCRIPTION	7JDB					REMARKS
1	7JD–H5650–10	ROTOR ASSY	1					
2	7JD–H5530–00	IGNITION COIL ASSY	1					
3	7JD–E1555–00	NUT, CRANKSHAFT 1	1					
4	7JD–RA102–10	BOLT, FLANGE	1					

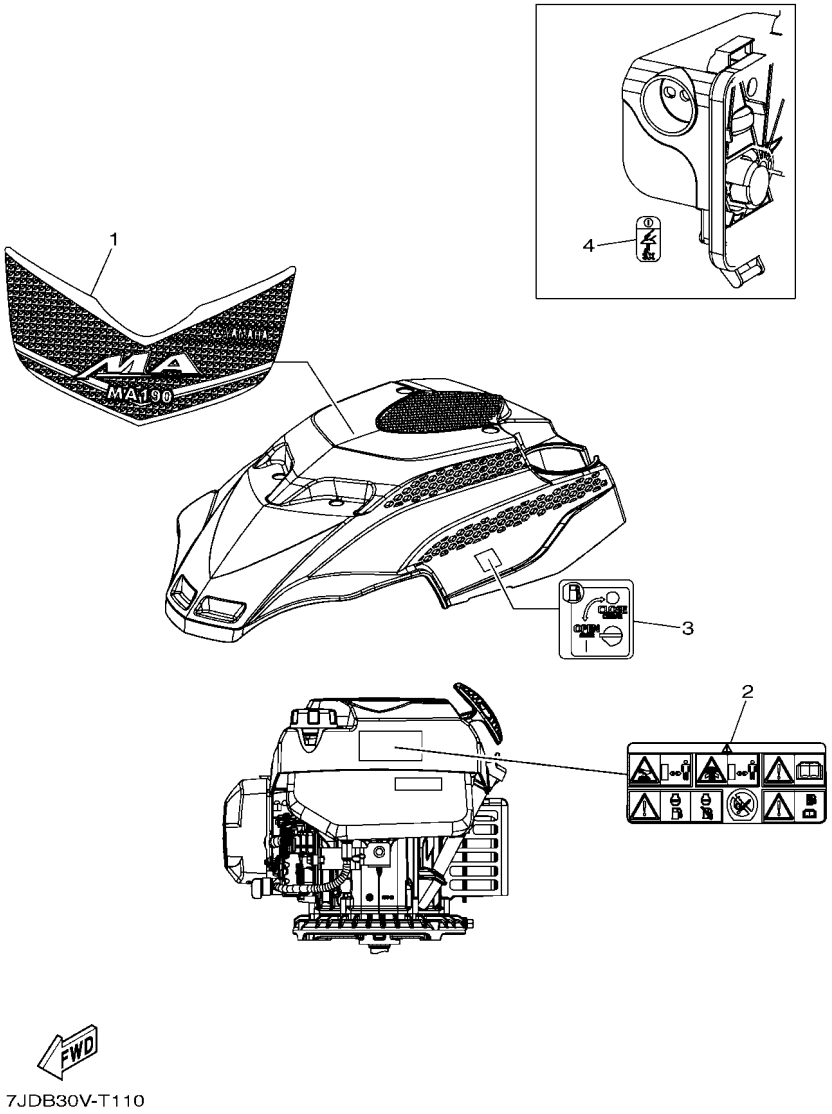

FIG. 11 EMBLEM & LABEL

REF. NO.	PART NO.	DESCRIPTION	7JDB					REMARKS
1	7JD–E2629–00	EMBLEM	1					
2	7EB–R151A–00	LABEL,WARNING 1	1					
3	7JD–R151M–10	LABEL 2	1					
4	7EB–R3127–00	LABEL,4	1					

PART NO.	REF. NO.
7JD–E1111–00	1 – 1
7JD–E1168–00	8 – 8
7JD–E1181–00	1 – 4
7JD–E1191–00	1 – 9
7JD–E1193–00	1 – 10
7JD–E119C–10	1 – 8
7JD–E1361–00	1 – 5
7JD–E1362–00	1 – 6
7JD–E1391–00	1 – 2
7JD–E1392–00	1 – 3
7JD–E1411–00	2 – 1
7JD–E1456–00	4 – 13
7JD–E1499–00	4 – 17
7JD–E1555–00	10 – 3
7JD–E1610–00	2 – 4
7JD–E1631–00	2 – 3
7JD–E1633–00	2 – 5
7JD–E1634–00	2 – 6
7JD–E1650–00	2 – 2
7JD–E1815–00	4 – 9
7JD–E1922–00	3 – 3
7JD–E1924–00	3 – 8
7JD–E1928–00	3 – 12
7JD–E1970–00	3 – 1
7JD–E2111–00	4 – 6
7JD–E2117–00	4 – 8
7JD–E2119–00	4 – 18
7JD–E2121–00	4 – 7
7JD–E2146–00	4 – 12
7JD–E2150–00	4 – 10
7JD–E2160–00	4 – 11
7JD–E2170–00	4 – 1
7JD–E2231–00	4 – 14
7JD–E2629–00	11 – 1
7JD–E262E–50	5 – 1
7JD–E3557–00	6 – 7
7JD–E3567–00	6 – 8
7JD–E3596–10	6 – 6
7JD–E3917–00	6 – 5
7JD–E4139–00	3 – 5
7JD–E4184–00	6 – 3
7JD–E4301–30	6 – 1
7JD–E4410–30	6 – 9
7JD–E4411–10	6 – 10
7JD–E4412–30	6 – 11
7JD–E4416–00	6 – 14
7JD–E4451–00	6 – 12
7JD–E4604–00	8 – 4

PART NO.	REF. NO.
7JD–E4613–00	7 – 5
7JD–E4708–10	7 – 4
7JD–E4710–00	7 – 1
7JD–E4786–00	7 – 2
7JD–E5111–00	8 – 1
7JD–E5181–00	8 – 12
7JD–E5181–10	8 – 16
7JD–E5181–20	1 – 7
7JD–E531A–00	1 – 11
7JD–E5346–00	8 – 10
7JD–E5362–30	8 – 6
7JD–E5363–00	8 – 18
7JD–E5374–00	8 – 9
7JD–E5374–10	8 – 11
7JD–E5411–00	8 – 14
7JD–E5451–00	8 – 20
7JD–E5710–00	5 – 3
7JD–E5723–00	5 – 7
7JD–E5741–00	5 – 6
7JD–E5755–00	5 – 4
7JD–E5781–00	5 – 5
7JD–E6146–00	4 – 16
7JD–E8226–40	3 – 11
7JD–F4110–20	9 – 1
7JD–F4167–20	9 – 3
7JD–F4500–10	9 – 6
7JD–F4514–00	9 – 4
7JD–F4610–00	9 – 2
7JD–H5530–00	10 – 2
7JD–H5650–10	10 – 1
7EB–R1110–00	6 – 16
7JD–R1167–00	6 – 2
7JD–R1327–00	4 – 3
	6 – 4
7EB–R1385–00	6 – 15
7EB–R151A–00	11 – 2
7JD–R151M–10	11 – 3
7JD–R2441–00	4 – 15
7JD–R2483–00	4 – 2
7JD–R2630–10	3 – 6
7EB–R3127–00	11 – 4
7JD–R4041–00	3 – 9
7JD–RA102–00	1 – 12
	3 – 7
	7 – 7
7JD–RA102–10	1 – 13
	9 – 5
	10 – 4

PART NO.	REF. NO.
7JD–RA102–20	3 – 2
7JD–RA102–30	4 – 4
7JD–RA102–40	8 – 5
7JD–RA102–50	8 – 13
7JD–RA102–60	8 – 7
	8 – 17
7JD–RA102–80	9 – 7
7JD–RA124–00	5 – 8
7JD–RA124–10	5 – 9
7JD–RA204–10	5 – 2
7JD–RA204–30	7 – 3
7JD–RA309–00	3 – 10
	5 – 10
	6 – 13
7JD–RA309–10	7 – 6
7JD–RA400–00	2 – 7
7JD–RA400–10	3 – 4
7JD–RA400–20	8 – 19
7JD–RA400–30	4 – 5
7JD–RA905–00	9 – 11
7JD–RA905–10	9 – 8
7EB–RAB00–00	6 – 17
7JD–RAB00–00	9 – 9
7JD–RAB00–10	9 – 10
7JD–RAB00–20	9 – 12
7JD–RAD01–00	3 – 13
7JD–RAE01–00	8 – 15
7JD–RAE01–10	8 – 3
7JD–RAE01–20	3 – 14
7JD–RAG02–00	8 – 2